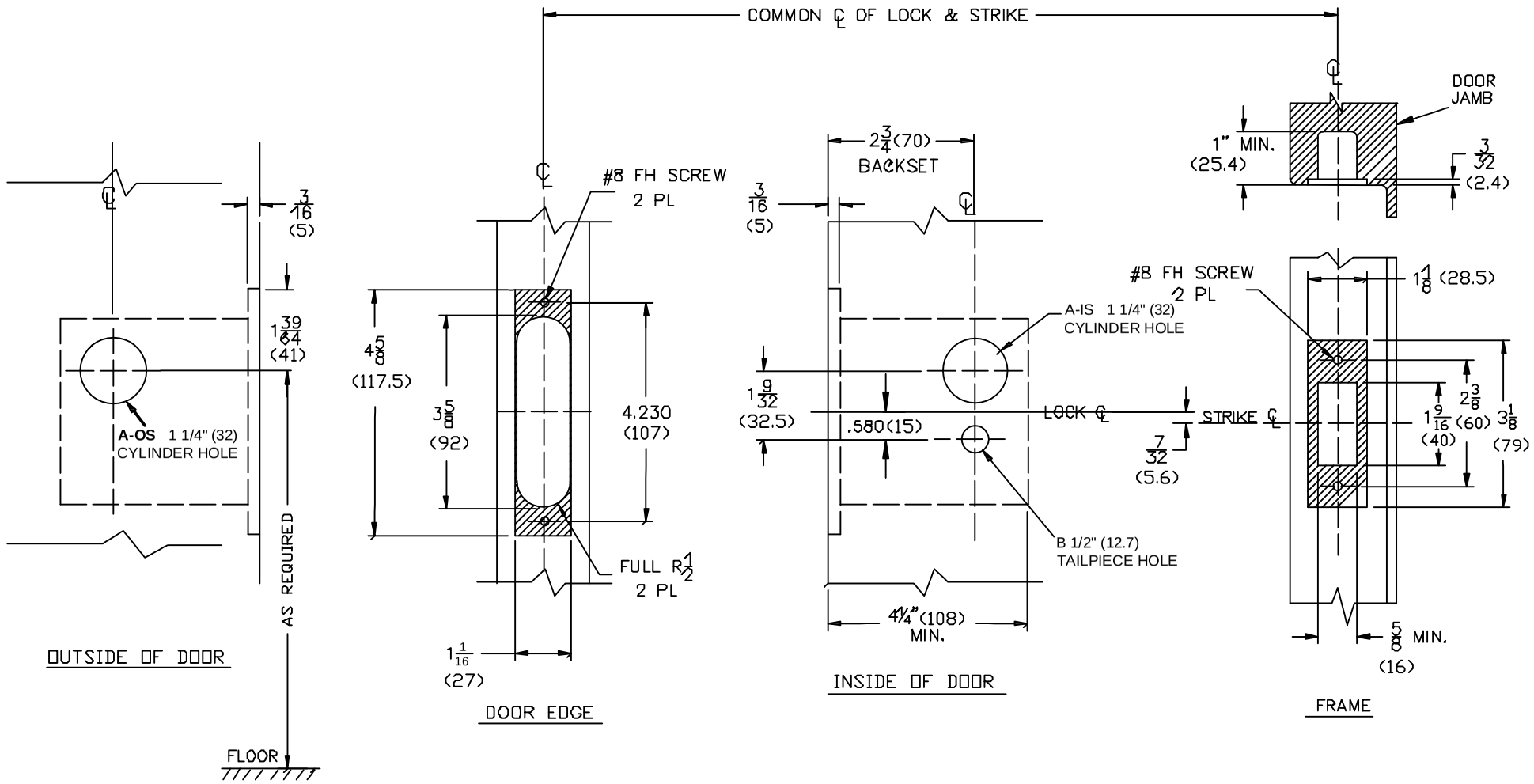

REQUIRED HOLES ON FACE OF DOOR

1) DRILL 1 1/4" (32) CYLINDER HOLE (**A-OS**) ON OUTSIDE OF DOOR

BROOKLINE

Brookline Industries
1624 South Clinton Street
Chicago, IL 60616 USA
http://brooklineind.com

A661 DEADBOLT CYLINDER OUTSIDE FOR WOOD DOORS

DIMENSIONS ARE INCHES ( ) ARE IN MILLIMETERS.

TEMPLATE NUMBER: **T- A661W** Rev1

DATE: 01 -01 2006