NOTE: 1) DOOR CUT-OUTS AS INDICATED UNDER DOOR DETAIL.
2) FRAME FOR STRIKE SHOWN UNDER LOCK DETAIL.

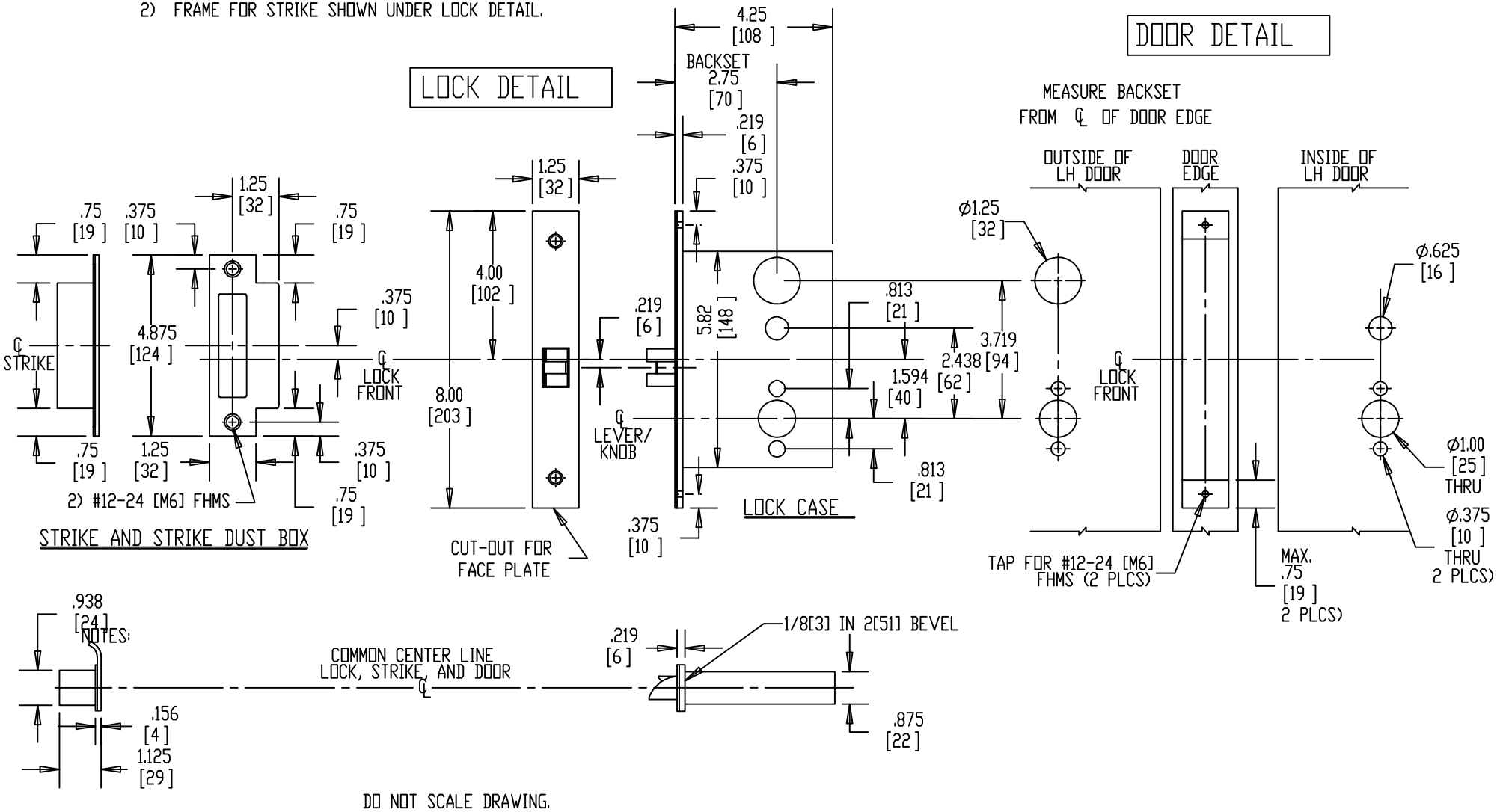

BROOKLINE

Brookline Industries
1624 South Clinton Street
Chicago, IL 60616 USA
http://brooklineind.com

M3056 WITH "A" or "B" ROSE FOR METAL DOORS

DIMENSIONS ARE INCHES ( ) ARE IN MILLIMETERS.

TEMPLATE NUMBER: **T- M3056ABM** Rev1

DATE: 01 -01 10